CONFIDENTIAL

LG Air Conditioner
SERVICE MANUAL
(Exploded View)

MODEL : ZUUW18GA0 [UU18WR U20]
ZUUW24GC0 [UU24WCR U20]
ZUUW30GC0 [UU30WCR U20]

CAUTION

Before Servicing the unit, read the safety precautions in General SVC manual.
Only for authorized service personnel.

Copyright © 2017 - 2019 LG Electronics Inc. All rights reserved. Only training and service purposes.

1. Specification

Model Name			Unit	ZUUW18GA0 [UU18WR U20]
Power Supply			V , Ø , Hz	220-240 / 1 / 50
Running Current	Cooling	Rated	A	7.1
	Heating	Rated	A	7.5
Power Factor		Rated	-	0.98
Power Supply Cable (included Earth)			No. x mm²	3C × 2.5
Casing Color			-	Warm Gray
Dimensions	Net	W x H x D	mm	870 x 650 x 330
Weight	Net		kg	44.8
Compressor	Type		-	Twin Rotary
	Model		Model x No.	DKT208MAB × 1
	Motor type		-	BLDC
	Motor Output		W x No.	1 500 × 1
Refrigerant	Type		-	R32
	GWP (Global Warming Potential)		-	675
	Precharged Amount		g	1 100
	t-CO_2eq.		-	0.74
	Control		-	Electronic Expansion Valve
	Chargeless-Pipe Length		m	7.5
	Additional Charging Volume		g/m	20
Refrigerant Oil	Type		-	FW68D
	Charged volume		cc x No.	670 × 1
Heat Exchanger	(Row x Column x FPI) x No.		-	(2 × 28 × 14) × 1
Fan	Type		-	Axial
	Air Flow Rate	Rated	m³/min x No.	50 × 1
Fan Motor	Type		-	BLDC
	Output		W x No.	85.4 × 1
Sound Pressure Level	Cooling	Rated	dB(A)	47
	Heating	Rated	dB(A)	52
Sound Power Level	Cooling	Rated	dB(A)	63
	Heating	Rated	dB(A)	-
Piping Connections	Liquid	Outer Dia.	mm (inch)	Ø 6.35 (1/4)
	Gas	Outer Dia.	mm (inch)	Ø 12.7 (1/2)
Piping Length		Rated	m	5.0
		Max.	m	30 (98.4)
Maximum Height Difference (ODU ~ IDU)		Max.	m	30 (98.4)
Continuous Operation Range (Outdoor Temp.)	Cooling	Min. ~ Max.	°C DB	-15 ~ 48
	Heating	Min. ~ Max.	°C WB	-18 ~ 18

Note:

1. All data are based on the following conditions:
   - Cooling Temperature : Indoor 27 °C(80.6 °F) DB / 19 °C(66.2 °F) WB
     Outdoor 35 °C(95 °F) DB / 24 °C(75.2 °F) WB
   - Heating Temperature : Indoor 20 °C(68 °F) DB / 15 °C(59 °F) WB
     Outdoor 7 °C(44.6 °F) DB / 6 °C(42.8 °F) WB
   - Piping Length : Interconnected Pipe Length = 7.5m
   - Difference Limit of Elevation (Outdoor ~ Indoor Unit) is Zero.
2. Wiring cable size must comply with the applicable local and national code.
3. Due to our policy of innovation some specifications may be changed without notification.
4. Sound Level Values are measured at Anechoic chamber.
   Therefore, these values can be increased(maximum 3dB(A)) owing to ambient conditions during operation.

Copyright © 2017 - 2019 LG Electronics Inc.
All rights reserved. Only training and service purposes.

Model Name			Unit	ZUUW24GC0 [UU24WCR U20]	ZUUW30GC0 [UU30WCR U20]
Power Supply			V , Ø , Hz	220-240 / 1 / 50	220-240 / 1 / 50
Running Current	Cooling	Rated	A	10.2	10.6
	Heating	Rated	A	10.6	10
Power Factor		Rated	-	0.98	0.98
Power Supply Cable (included Earth)			No. x mm²	3C × 2.5	3C × 2.5
Casing Color			-	Warm Gray	Warm Gray
Dimensions	Net	W x H x D	mm	870 x 650 x 330	870 x 650 x 330
Weight	Net		kg	45	45
Compressor	Type		-	Twin Rotary	Twin Rotary
	Model		Model x No.	DKT208MAB × 1	DKT208MAB × 1
	Motor type		-	BLDC	BLDC
	Motor Output		W x No.	1 500 × 1	1 500 × 1
Refrigerant	Type		-	R32	R32
	GWP (Global Warming Potential)		-	675	675
	Precharged Amount		g	1 300	1 300
	t-CO_2eq.		-	0.878	0.878
	Control		-	Electronic Expansion Valve	Electronic Expansion Valve
	Chargeless-Pipe Length		m	7.5	7.5
	Additional Charging Volume		g/m	35	35
Refrigerant Oil	Type		-	FW68D	FW68D
	Charged volume		cc x No.	670 × 1	670 × 1
Heat Exchanger	(Row x Column x FPI) x No.		-	(2 × 28 × 14) × 1	(2 × 28 × 14) × 1
Fan	Type		-	Axial	Axial
	Air Flow Rate	Rated	m³/min x No.	50 × 1	50 × 1
Fan Motor	Type		-	BLDC	BLDC
	Output		W x No.	85.4 × 1	85.4 × 1
Sound Pressure Level	Cooling	Rated	dB(A)	49	50
	Heating	Rated	dB(A)	53	54
Sound Power Level	Cooling	Rated	dB(A)	65	67
	Heating	Rated	dB(A)	-	-
Piping Connections	Liquid	Outer Dia.	mm (inch)	Ø9.52(3/8)	Ø9.52(3/8)
	Gas	Outer Dia.	mm (inch)	Ø15.88(5/8)	Ø15.88(5/8)
Piping Length		Rated	m	5.0	5.0
		Max.	m	35 (114.8)	35 (114.8)
Maximum Height Difference (ODU ~ IDU)		Max.	m	30 (98.4)	30 (98.4)
Continuous Operation Range (Outdoor Temp.)	Cooling	Min. ~ Max.	°C DB	-10 ~ 48	-10 ~ 48
	Heating	Min. ~ Max.	°C WB	-10 ~ 18	-10 ~ 18

Note:

1. All data are based on the following conditions:
   - Cooling Temperature : Indoor 27 °C(80.6 °F) DB / 19 °C(66.2 °F) WB
     Outdoor 35 °C(95 °F) DB / 24 °C(75.2 °F) WB
   - Heating Temperature : Indoor 20 °C(68 °F) DB / 15 °C(59 °F) WB
     Outdoor 7 °C(44.6 °F) DB / 6 °C(42.8 °F) WB
   - Piping Length : Interconnected Pipe Length = 7.5m
   - Difference Limit of Elevation (Outdoor ~ Indoor Unit) is Zero.
2. Wiring cable size must comply with the applicable local and national code.
3. Due to our policy of innovation some specifications may be changed without notification.
4. Sound Level Values are measured at Anechoic chamber.
   Therefore, these values can be increased(maximum 3dB(A)) owing to ambient conditions during operation.

Copyright © 2017 - 2019 LG Electronics Inc.
All rights reserved. Only training and service purposes.

2. List of Functions

Outdoor

Category	Functions	ZUUW18GA0 [UU18WR U20]	ZUUW24GC0 [UU24WCR U20]	ZUUW30GC0 [UU30WCR U20]
Reliability	Defrost / Deicing	O	O	O
	High pressure switch	O	O	O
	Low pressure switch	X	X	X
	Phase protection	X	X	X
	Restart delay (3-minutes)	O	O	O
	Self diagnosis	O	O	O
	Soft start	O	O	O
Convenience	Test function	O	O	O
	Night Silent Operation	O	O	O
	Wiring Error Check	X	X	X
	Peak Control	O	O	O
	Mode Lock	O	O	O
	Forced Cooling Operation (Outdoor Unit)	O	O	O
Network function	Network soluation(LGAP)	O	O	O

Note:
O : Applied, X : Not applied

Copyright © 2017 - 2019 LG Electronics Inc.
All rights reserved. Only training and service purposes.

3. Piping Diagrams

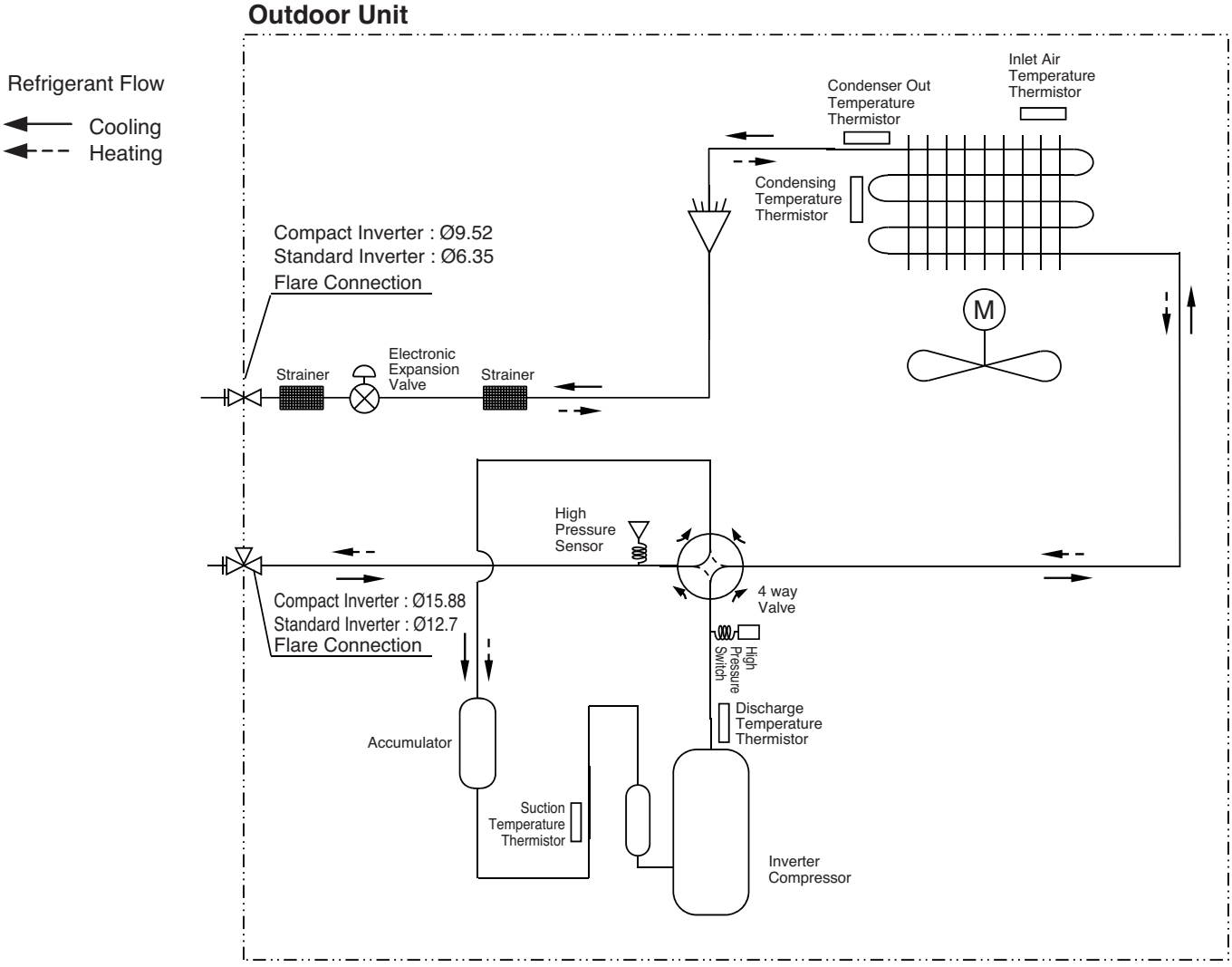

Compact Inverter : ZUUW24GC0 [UU24WCR U20], ZUUW30GC0 [UU30WCR U20]
Standard Inverter : ZUUW18GA0 [UU18WR U20]

Description	PCB Connector
Inlet Air Temperature Thermistor	CN-AIR
Condenser Out Temperature Thermistor	CN-C_PIPE
Discharge Temperature Thermistor	CN-DISCHARGE
Suction Temperature Thermistor	CN-SUCTION
Condensing Temperature Thermistor	CN-MID
High Pressure Sensor	CN-H_PRESS
Electronic Expansion Valve	CN-EEV_A
Pressure switch	CN_PRESS(WH)

Copyright © 2017 - 2019 LG Electronics Inc.
All rights reserved. Only training and service purposes.

4. Wiring Diagrams

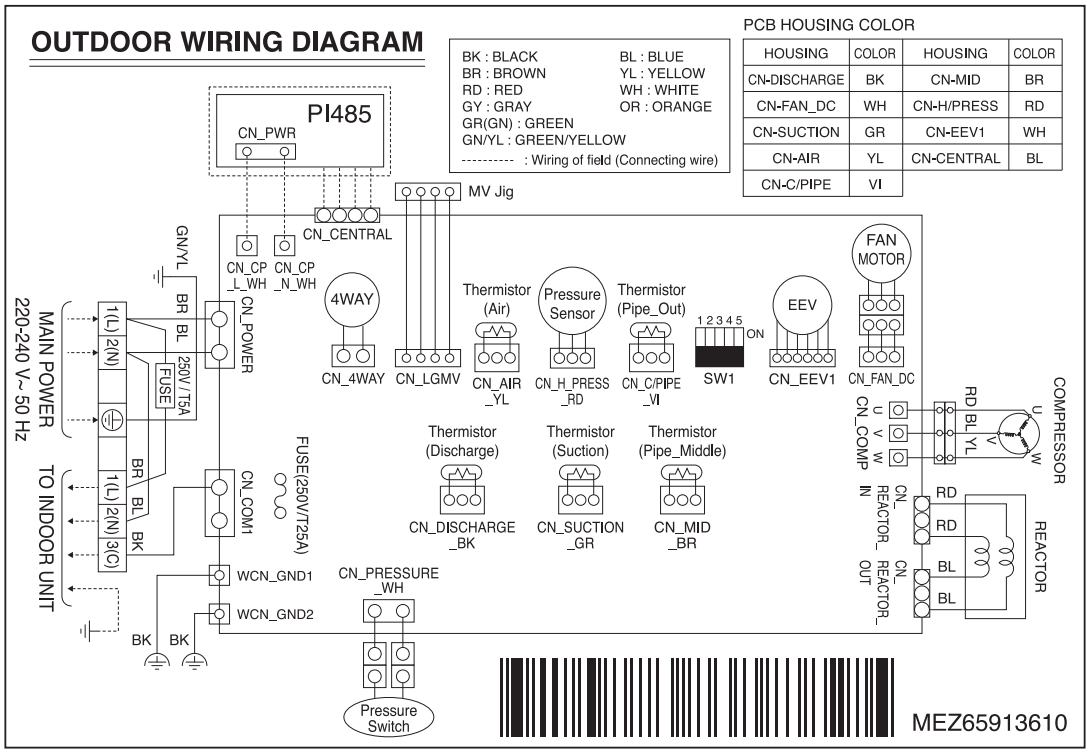

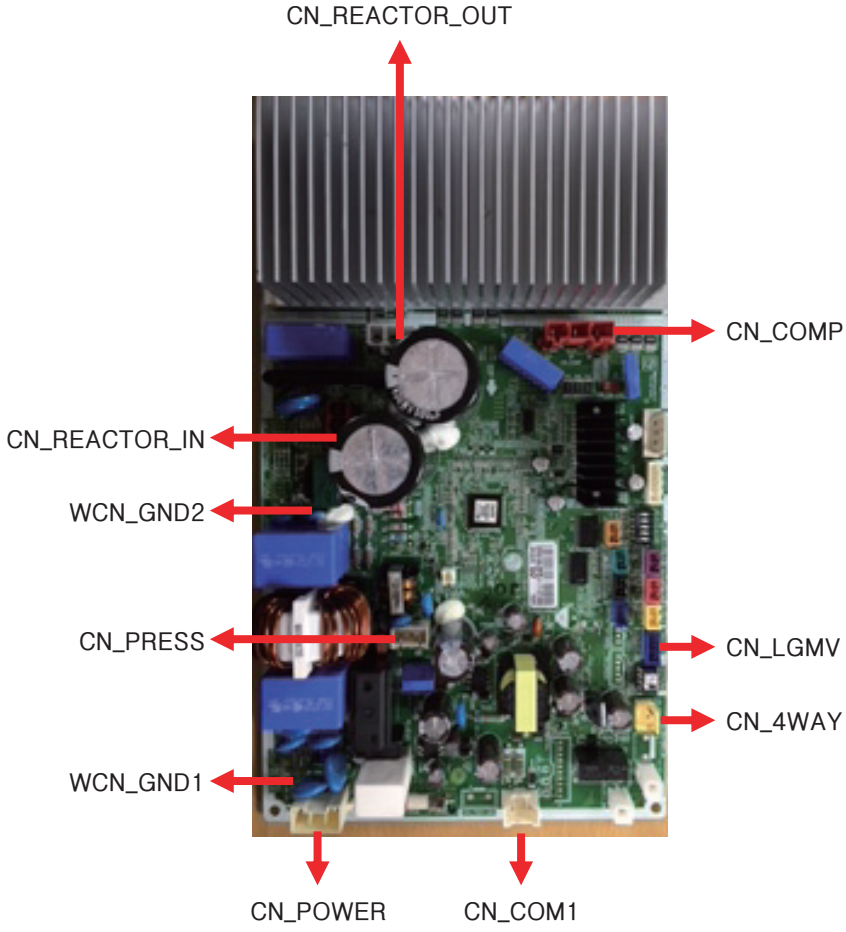

Copyright © 2017 - 2019 LG Electronics Inc.
All rights reserved. Only training and service purposes.

5. Exploded View

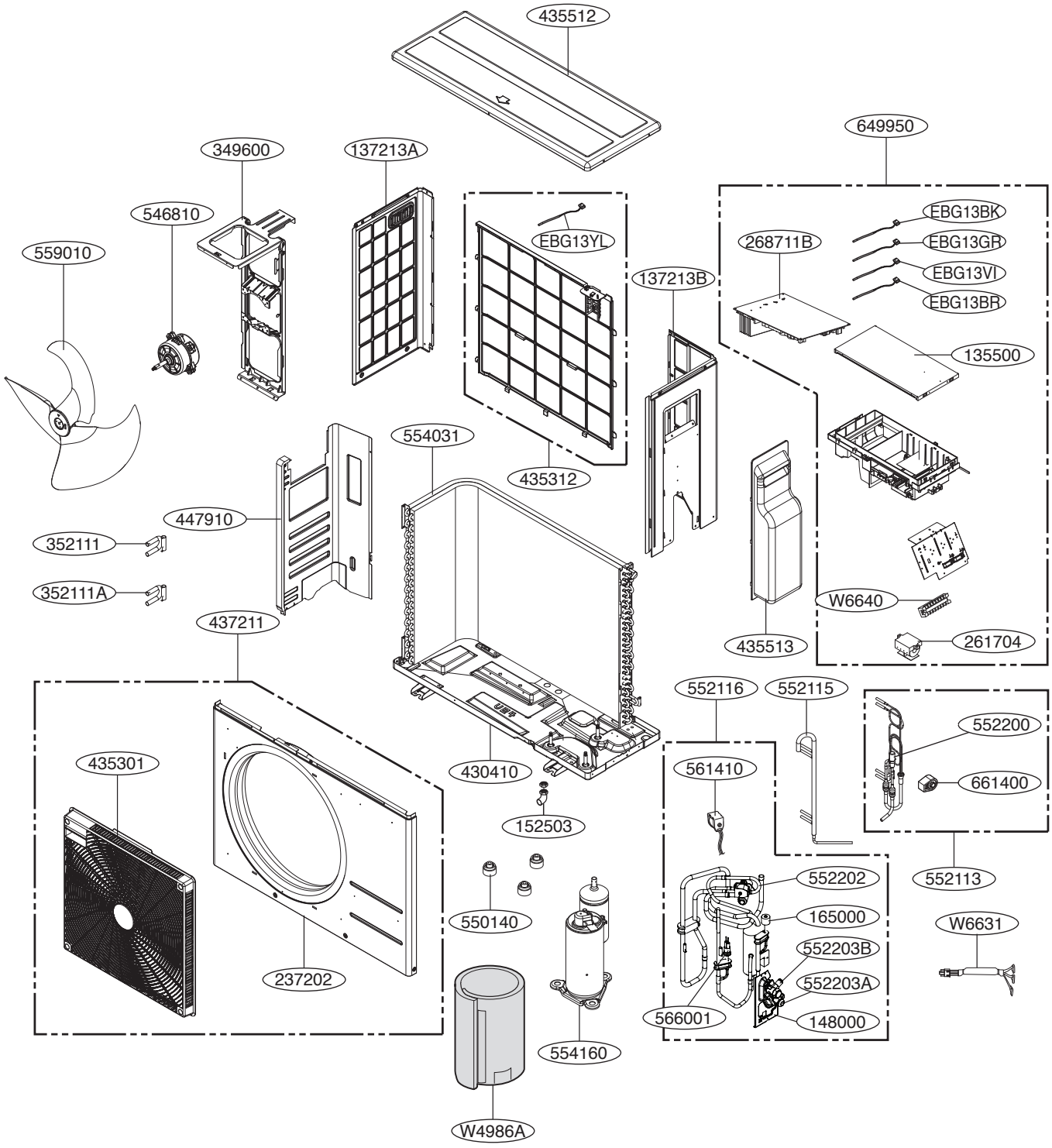

Location No.	Description	Sensor Information	Housing Color
EBG13BK	Thermistor (CN-DISCHARGE)	Discharge pipe thermistor	Black
EBG13GR	Thermistor (CN-SUCTION)	Suction pipe thermistor	Green
EBG13VI	Thermistor (CN-C_PIPE)	Condenser out thermistor	Violet
EBG13BR	Thermistor (CN-MID)	Middle thermistor	Brown
EBG13YL	Thermistor (CN-AIR)	Air thermistor	Yellow
165000	CN-H_PRESS	High Pressure Sensor	Red

Copyright © 2017 - 2019 LG Electronics Inc.
All rights reserved. Only training and service purposes.

P/NO : MFL67605733

Copyright © 2017 - 2019 LG Electronics Inc. All rights reserved. Only training and service purposes.